NIPPON STEEL

www.nipponsteel.com

NIPPON STEEL CORPORATION
2-6-1 Marunouchi, Chiyoda-ku,Tokyo 100-8071 Japan
Tel: +81-3-6867-4111

RAILS
K003en_02_202004f
© 2019, 2020 NIPPON STEEL CORPORATION

NIPPON STEEL

Construction Product

RAILS

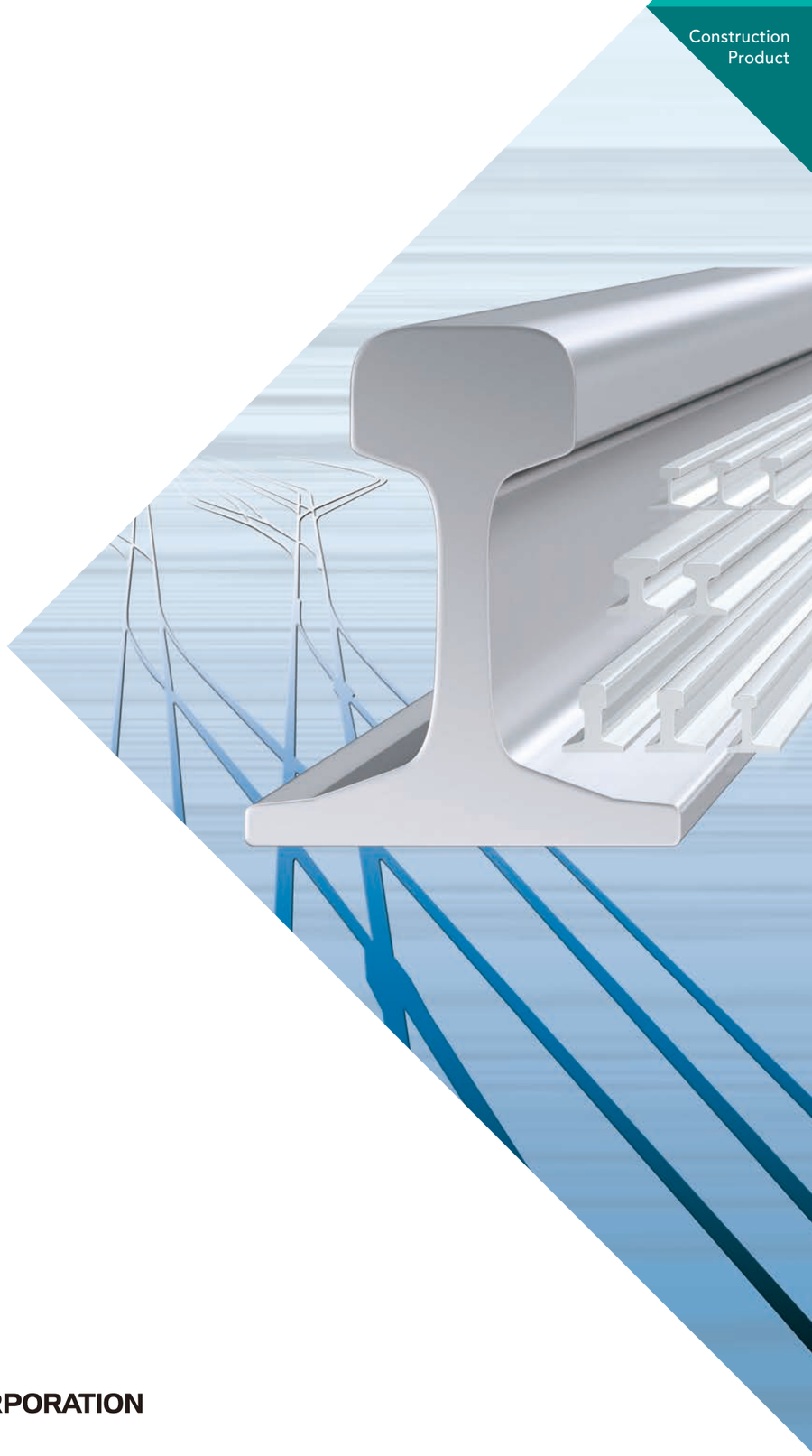

NIPPON STEEL CORPORATION

Notice: While every effort has been made to ensure the accuracy of the information contained within this publication, the use of the information is at the reader's risk and no warranty is implied or expressed by NIPPON STEEL CORPORATION with respect to the use of the information contained herein. The information in this publication is subject to change or modification without notice. Please contact the NIPPON STEEL CORPORATION office for the latest information.
Please refrain from unauthorized reproduction or copying of the contents of this publication.
The names of our products and services shown in this publication are trademarks or registered trademarks of NIPPON STEEL CORPORATION, affiliated companies, or third parties granting rights to NIPPON STEEL CORPORATION or affiliated companies. Other product or service names shown may be trademarks or registered trademarks of their respective owners.

Rails Manufactured by NIPPON STEEL

Since 1901, NIPPON STEEL has been manufacturing rails of every description for more than 110 years, using cutting edge equipment and accumulated technology.

NIPPON STEEL rails are highly rated at home and abroad.

Not only that they meet most of the domestic demand, but also exported in large quantities to many countries around the globe.

NIPPON STEEL rails are available in various sizes and materials, so that they can be used for diverse applications, such as ordinary passenger railways, high speed railways, and heavy haul railways.

In addition to standard rails, NIPPON STEEL manufactures various rails such as Head hardened rail, rail for Heavy haul, Tongue rail, and crane rails.

As one of the world's leading rail maker with superior quality, NIPPON STEEL are greatly contributing to Economical and Green railway transportations all over the world.

CONTENTS

Features	02
Manufacturing Process	04
Standard Rails	06
Head Hardened Rail (DHH rail)	12
Rail for Heavy Haul (HE rail™)	19
Special Rails	22
Tongue Rails	23
Crane Rails	25
Marking	26
Research on Rails	28

Features

1 Production by the Universal Rolling Process, with newest technology

- Rail head with superior forging effect.
- Highly symmetrical cross sections.
- Smooth surface without defect

2 World top class technology and facility for producing uniform rails; Steel making, Rolling, Straitening

- Highly uniform steel by continuous casting method.
- Superior quality with high purity.
- Uniform dimensions and shape for all length of the rail

3 Inspection by in-line automatic testing machines

- Non-destructive testing by Ultra-Sonic Testers
- Surface defect testing by Eddy Current testers
- Automatic dimension measurement by Laser

4 Research and Development organized advancing toward easy to use, superior quality rails.

- Integrated Research and Development organization, with basic theory to product characteristics, welding technology and evaluation of rail performance

5 Setting Up the system to manufacture and ship the world longest as rolled rails for railroads — 150-meter(480ft) long rails —

- Worlds longest Ex-mill, not welded, long rails for railways
- Reducing rail maintenance of railway companies by reducing the number of weld
- Serve to help stabilize the rail

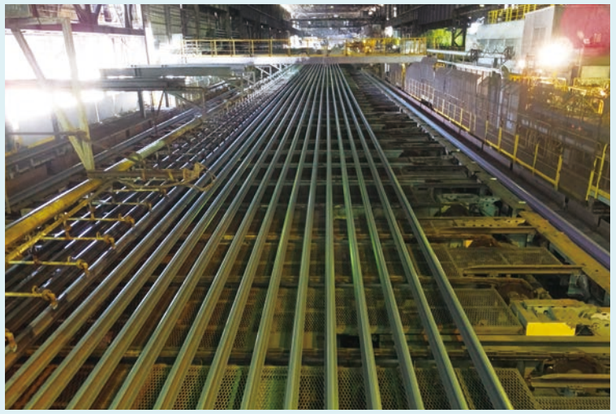

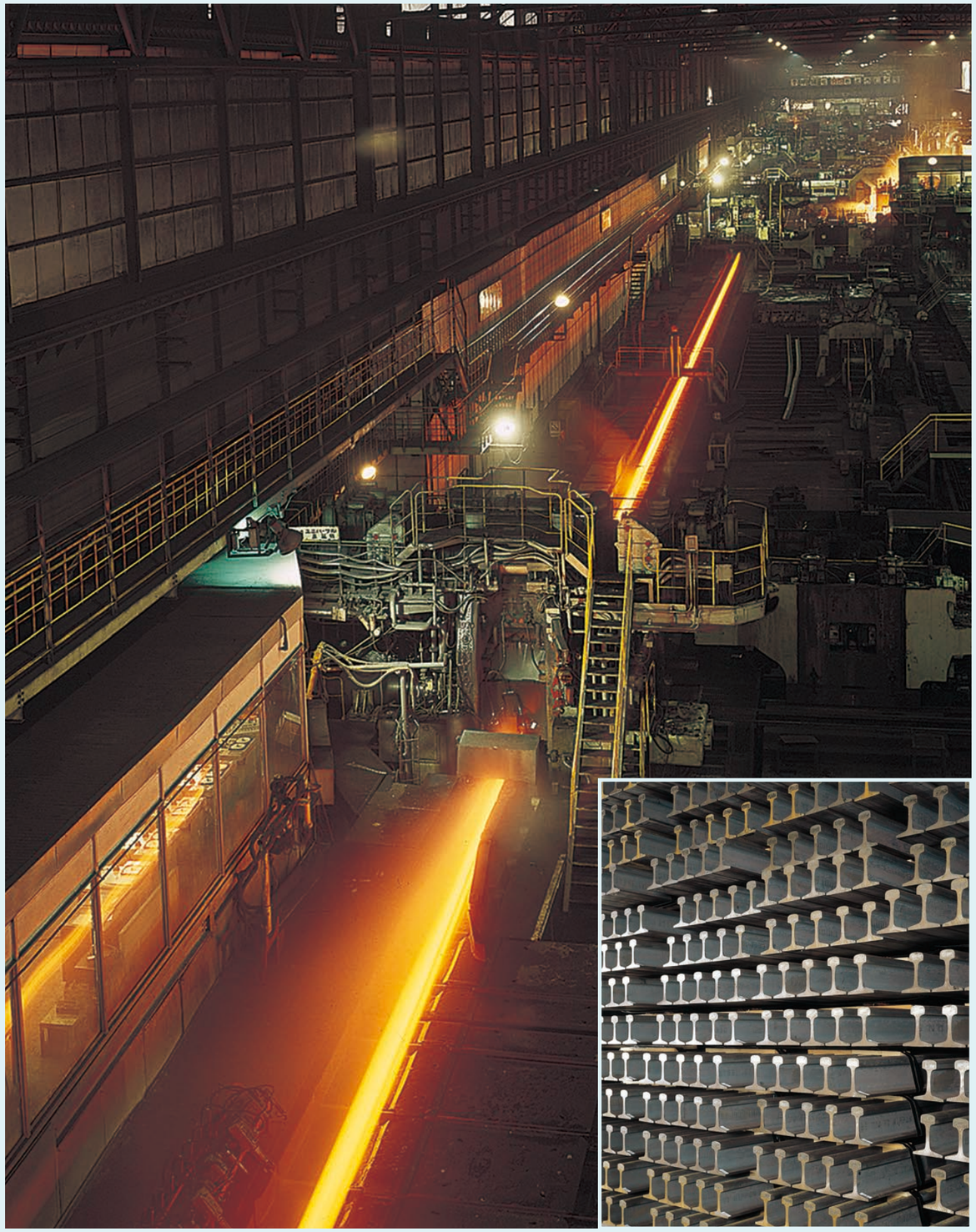

Manufacturing Process

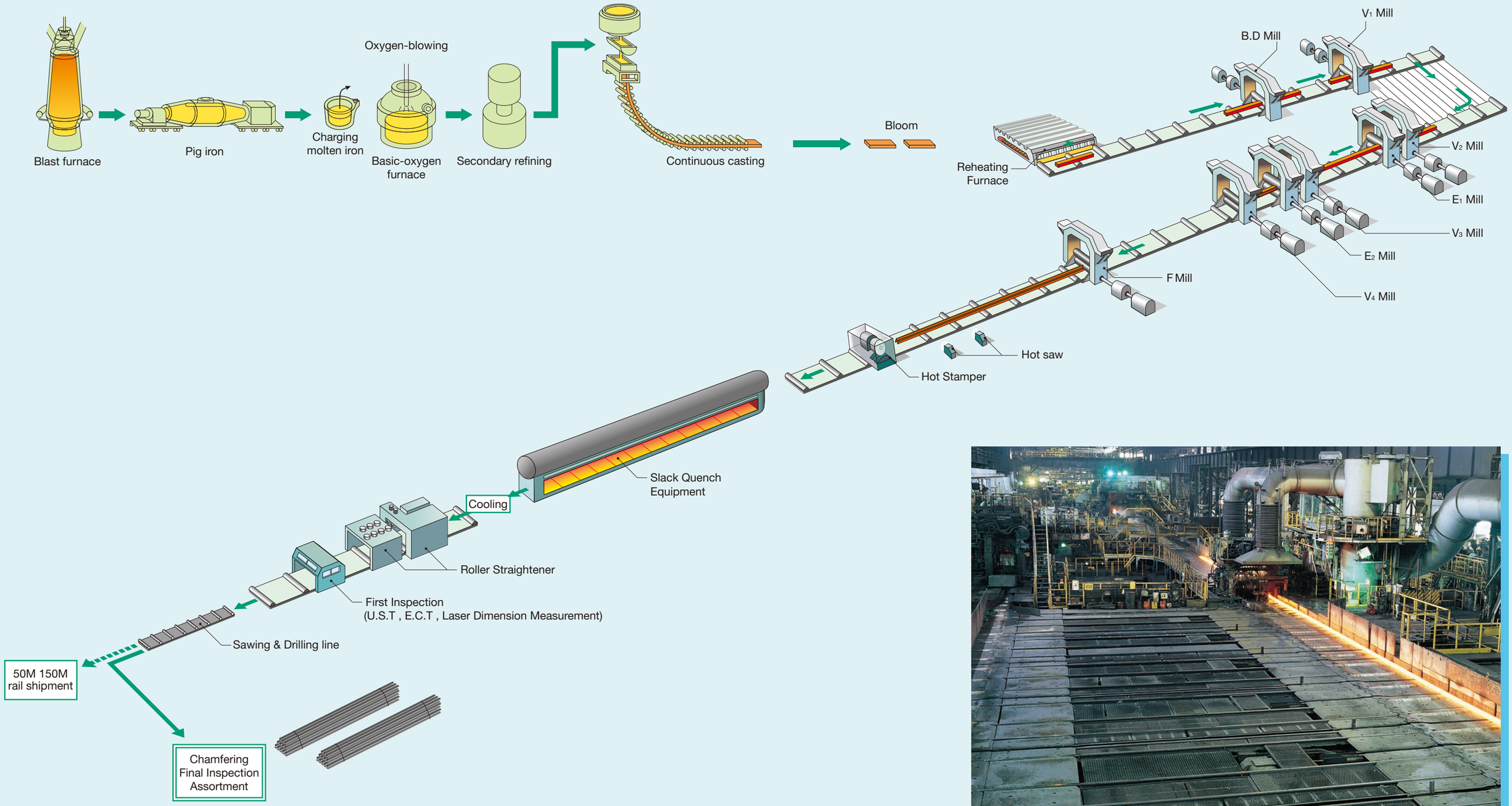

Rolling Mill

Standard Rails

NIPPON STEEL has varieties of standard rails.

Specifications

NIPPON STEEL rails are produced to the specifications listed in the table below.

Chemical Composition and Mechanical Properties

Specifications			Chemical Composition					Mechanical Properties						Falling Weight Testing		
Number	Classification		C	Si	Mn	P	S	Yield Strength		Tensile Strength	Elongation	Test Piece	Brinell hardness	Weight of falling weight	Height of drop	Distance between bearer
			range	range	range	max.	max.	min.		range or min.	min.		range or min.			
			%	%	%	%	%	N/mm²		N/mm²(kgf/mm²)	%	mm	HBW	kg	m	m
AREMA Chapter 4"Rail"	Standard Strength		0.74–0.86	0.10–0.60	0.75–1.25	0.020	0.020	510		983min.	10	diam.=12.7mm GL=50.8mm	310	–	–	–
	Intermediate strength		0.72–0.82	0.10–1.00	0.70–1.25	0.020	0.020	552		1014min	8		325			
	High strength		0.74–0.86	0.10–0.60	0.75–1.25	0.020	0.020	827		1179min	10		370			
EN13674–1	R260		0.62–0.80	0.15–0.58	0.70–1.20	0.025	0.025	–		880min	10	diam.=10mm GL=50mm	260–300	–	–	–
	R350HT		0.72–0.80	0.15–0.58	0.70–1.20	0.020	0.025	–		1175min	9		350–390			
IRS T12–2009	GR1080		0.60–0.80	0.10–0.50	0.80–1.30	0.030	0.030	460		1080min.	10	diam.=10mm GL=50mm	340–390	1270	7.4	0.850
UIC860–R	GR900A		0.60–0.80	0.10–0.50	0.80–1.30	0.040	0.040	–		880-1030	10	diam.=10mm GL=50mm	–	1,000	Mass of rail $150\times\frac{(kg/m)}{1000}$	1.000
JIS E1101–2001	Standard Rail	37A	0.55–0.70	0.15–0.35	0.60–0.90	0.045	0.050	–		690min.(70)	9	JIS No.4 diam.=10mm GL=50mm	–	907	HU5.0	0.914
		40N	0.63–0.75	0.15–0.30	0.70–1.10	0.030	0.025			800min.(82)	10		235		HD5.1	
		50N													HD7.0	
		60													HD10.6	
JIS E1120–2007	HH340		0.72–0.82	0.10–0.55	0.70–1.10	0.030	0.020	–		1080(110)	8		321–375		*1	
	HH370			0.10–0.65	0.80–1.20					1130(115)			331–388		*1	

*1 Height of falling for falling weight testing are as per JIS E1101-2001

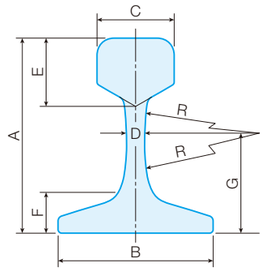

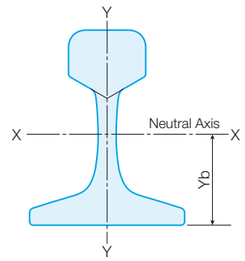

Dimensions and Weights

The dimensions and weights of rails being manufactured at NIPPON STEEL are tabulated below. Manufacture of sections other than those tabulated below will be considered depending on your quantities ordered.
The standard length for tails is 25m under JIS, but longer or shorter length can be delivered if required.
150m rail is also available.

Specifications		Item / Notes / Unit / Symbol	Dimensions																Sectional Area		Weight		Distance from Base of Rail to Neutral Axis		Moment of Inertia				Secondaly radius of cross section				Section Modulus							
																																	Zx				Zy			
			A		B		C		D		E		F		G		R		S		W		Yb		Ix		Iy		ix		iy		Head		Base		Head		Base	
			mm	in.	mm	in.	mm	in.	mm	in.	mm	in.	mm	in.	mm	in.	mm	in.	cm²	in.²	kg/m	lb/yd	mm	in.	cm⁴	in.⁴	cm⁴	in.⁴	mm	in.	mm	in.	cm³	in.³	cm³	in.³	cm³	in.³	cm³	in.³
EN	54kg	EN54E1	159.00	(6-13/50)	140.00	(5-22/43)	70.00	(2-65/86)	16.00	(17/27)	49.40	(1-17/18)	30.20	(1-7/37)	76.20	(3)	508.00	(20)	69.77	(10.73)	54.77	–	(75.1)	–	(2,338)	(56.17)	(419.2)	(10.05)	(57.9)	(2.28)	(24.51)	(0.97)	(278.7)	(10.97)	(311.2)	(18.98)	(116.09)	(7.08)	(59.67)	(3.64)
	60kg	EN60E1	172.00	(6-71/92)	150.00	(5-48/53)	72.00	(2-5/6)	16.50	(13/20)	51.00	(2)	31.50	(1-6/25)	60.25/92.25	(2-16/43/3-12/19)	120.00	(4-71/98)	76.70	(11.80)	60.21	–	(80.9)	–	(3,038)	(72.99)	(512.3)	(12.29)	(62.9)	(2.48)	(25.84)	(1.02)	(333.6)	(13.13)	(375.5)	(22.90)	(137.62)	(8.39)	(68.16)	(4.16)
		EN60E2	172.00	(6-71/92)	150.00	(5-48/53)	72.00	(2-5/6)	16.50	(13/20)	51.00	(2)	31.50	(1-6/25)	60.25/92.25	(2-16/43/3-12/19)	120.00	(4-71/98)	76.48	(11.85)	60.03	–	(80.7)	–	(3,022)	(72.60)	(510.5)	(12.26)	(62.9)	(2.47)	(25.84)	(1.02)	(330.8)	(20.19)	(374.5)	(22.85)	(137.78)	(8.41)	(68.07)	(4.15)
UIC	54kg	UIC54	159.00	(6-13/50)	140.00	(5-22/43)	70.00	(2-65/86)	16.00	(17/27)	49.40	(1-17/18)	30.20	(1-7/37)	76.20	(3)	508.00	(20)	69.34	(10.67)	54.43	–	(75.0)	–	(2,346)	(56.37)	(417.5)	(10.01)	(58.2)	(2.29)	(24.54)	(0.97)	(279.2)	(10.99)	(312.9)	(19.08)	(116.30)	(7.09)	(60.00)	(3.66)
	60kg	UIC60	172.00	(6-71/92)	150.00	(5-48/53)	72.00	(2-5/6)	16.50	(13/20)	51.00	(2)	31.50	(1-6/25)	60.25/92.25	(2-16/43/3-12/19)	120.00	(4-71/98)	76.86	(11.82)	60.34	–	(81.0)	–	(3,055)	(73.40)	(512.9)	(12.30)	(63.0)	(2.48)	(25.83)	(1.02)	(335.5)	(13.21)	(377.4)	(23.01)	(138.40)	(8.44)	(68.50)	(4.18)
AREMA	115lbs	115RE	(168.27)	6-5/8	(139.70)	5-1/2	(69.05)	2-23/32	(15.87)	5/8	(42.86)	1-11/16	(28.57)	1-1/8	(82.55)	3-1/4	(355.60)	14	(72.59)	11.22	56.74	141.38	–	2.99	(2,726)	(65.5)	(447.0)	(10.70)	(61.3)	(2.41)	(24.8)	(0.98)	(297)	(18.00)	(361)	(21.90)	(129.5)	(7.88)	(63.9)	(3.89)
		115L-10	(168.27)	6-5/8	(139.70)	5-1/2	(69.05)	2-23/32	(15.87)	5/8	(42.86)	1-11/16	(28.57)	1-1/8	(82.55)	3-1/4	(355.60)	14	(72.80)	11.25	56.90	141.68	–	2.98	(2,742)	(65.9)	(447.0)	(10.70)	(61.4)	(2.41)	(24.8)	(0.98)	(298.7)	(18.10)	(362.6)	(22.00)	(129.8)	(7.90)	(64.1)	(3.90)
	132lbs	132RE	(180.97)	7-1/8	(152.40)	6	(76.20)	3	(16.66)	21/32	(44.45)	1-3/4	(30.16)	1-3/16	(98.43)	3-7/8	(406.40)	16	(83.30)	12.91	65.53	130.80	–	3.20	(3,658)	(87.9)	(601.6)	(14.40)	(66.3)	(2.61)	(26.9)	(1.06)	(367)	(22.40)	(449)	(27.40)	(156.8)	(9.57)	(78.5)	(4.79)
	136lbs	136RE	(185.73)	7-5/16	(152.40)	6	(74.61)	2-15/16	(17.46)	11/16	(49.21)	1-15/16	(30.16)	1-3/16	(98.43)	3-7/8	(508.00)	20	(85.98)	13.33	67.41	135.88	–	3.34	(3,920)	(94.2)	(603.2)	(14.44)	(67.5)	(2.66)	(26.5)	(1.04)	(388)	(23.70)	(462)	(28.20)	(161.1)	(9.83)	(79.0)	(4.82)
		136L-10	(185.73)	7-5/16	(152.40)	6	(74.61)	2-15/16	(17.46)	11/16	(49.21)	1-15/16	(30.16)	1-3/16	(98.43)	3-7/8	(508.00)	20	(85.98)	13.33	67.48	136.02	–	3.34	(3,920)	(94.2)	(603.2)	(14.44)	(67.5)	(2.66)	(26.5)	(1.04)	(388)	(23.70)	(462)	(28.20)	(161.1)	(9.83)	(79.0)	(4.82)
	141lbs	141RE	(188.91)	7-7/16	(152.40)	6	(77.79)	3-1/16	(17.46)	11/16	(54.77)	2-5/32	(30.16)	1-3/16	(98.43)	3-7/8	(508.00)	20	(89.01)	13.80	69.79	140.70	–	3.25	(4,180)	(100.4)	(622.9)	(14.91)	(68.5)	(2.70)	(26.5)	(1.04)	(414)	(25.24)	(475)	(28.97)	(161.8)	(9.87)	(81.4)	(4.97)
GOST	65kg	P65	180.00	(7-2/23)	150.00	(5-48/53)	75.00	(2-20/21)	18.00	(17/24)	45.00	(1-71/92)	30.00	(1-2/11)	82.50	(3-1/4)	400.00	(15-3/4)	82.65	(12.72)	64.72	–	81.3	–	(3,540)	(85.1)	(564.0)	(13.53)	(65.4)	(2.58)	(26.1)	(1.03)	(245.00)	(14.94)	(285.00)	(17.38)	(150.4)	(9.17)	(75.2)	(4.59)
AS	60kg	AS60	170.00	(6-9/13)	146.00	(5-3/4)	70.00	(2-65/86)	16.50	(13/20)	49.00	(1-13/14)	28.00	(1-4/39)	80.00	(3-3/20)	300.00	(11-73/90)	77.28	(11.89)	60.70	–	79.1	–	(2,940)	(70.6)	(491.0)	(11.77)	(61.7)	(2.43)	(25.2)	(0.99)	(323.20)	(19.71)	(371.40)	(22.65)	(140.3)	(8.55)	(67.3)	(4.10)
	68kg	AS68	185.00	(7-19/67)	152.40	(6)	74.60	(2-15/16)	17.50	(31/45)	49.20	(1-15/16)	30.20	(1-7/37)	98.40	(3-7/8)	508.00	(20)	86.02	(13.23)	67.50	–	85.0	–	(3,940)	(94.7)	(602.0)	(14.44)	(67.7)	(2.66)	(26.5)	(1.04)	(391.70)	(23.88)	(463.80)	(28.28)	(161.4)	(9.84)	(79.0)	(4.82)
TR	45kg	TR45	(142.87)	5-5/8	(130.17)	5-1/8	(65.08)	2-9/16	(14.28)	9/16	(37.30)	1-15/32	(25.40)	1	(73.18)	2-37/42	(355.60)	14	(56.90)	8.82	(44.64)	90.00	–	2.54	(1,611)	(38.7)	(308.0)	(7.40)	(53.2)	(2.09)	(23.3)	(0.92)	(206.00)	(12.60)	(249.00)	(15.20)	(94.70)	(5.78)	(47.30)	(2.89)
JIS	37kg	37A	122.24	(4-13/16)	122.24	(4-13/16)	62.71	(2-15/32)	13.49	(17/32)	(36.12)	(1-19/45)	21.43	(27/32)	53.78	(2-1/8)	304.80	(12)	47.33	(7.34)	37.20	–	(57.7)	–	(954)	(22.92)	(226.0)	(5.42)	(44.9)	(1.17)	(21.85)	(0.86)	(149.0)	(9.09)	(163.0)	(9.94)	(71.90)	(4.39)	(36.90)	(2.25)
	40kgN	40N	140.00	(5-22/43)	122.00	(4-49/61)	64.00	(2-13/25)	14.00	(43/78)	(41.00)	(1-35/57)	25.50	(1)	70.00	(2-3/4)	500.00	(19-11/16)	52.01	(8.06)	40.90	–	(66.9)	–	(1,369)	(32.89)	(231.0)	(5.54)	(51.3)	(2.02)	(21.07)	(0.83)	(187.0)	(11.40)	(205.0)	(12.50)	(72.10)	(4.40)	(37.80)	(2.31)
	50kgN	50N	153.00	(6-2/85)	127.00	(5)	65.00	(2-52/93)	15.00	(13/22)	(49.00)	(1-13/14)	30.00	(1-3/16)	76.00	(2-63/64)	500.00	(19-11/16)	64.20	(9.95)	50.40	–	(71.6)	–	(1,968)	(47.28)	(334.0)	(8.01)	(55.4)	(2.18)	(22.84)	(0.90)	(242.0)	(14.80)	(275.0)	(16.80)	(102.60)	(6.26)	(52.50)	(3.21)
	60kg	60	174.00	(6-17/20)	145.00	(5-17/24)	65.00	(2-52/93)	16.50	(13/20)	(49.00)	(1-13/14)	30.10	(1-3/16)	77.50	(3-3/64)	500.00	(19-11/16)	77.50	(12.00)	60.80	–	(77.8)	–	(3,083)	(74.07)	(512.0)	(12.31)	(63.1)	(2.48)	(25.70)	(1.01)	(321.0)	(19.60)	(396.0)	(24.20)	(157.70)	(9.62)	(70.70)	(4.31)

( ) denotes values not stipulated in specifications but calculated by NIPPON STEEL

Section

AREMA (American Railway Engineering and Maintenance-of-way Association)

115 RE Rail

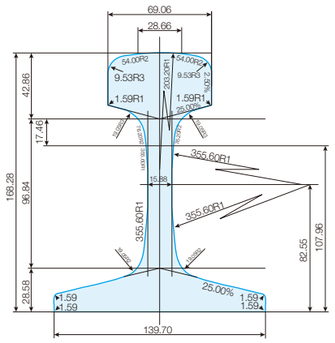

136 RE Rail

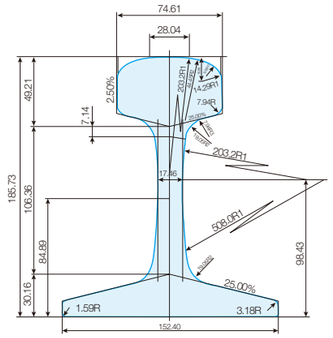

141 RE Rail

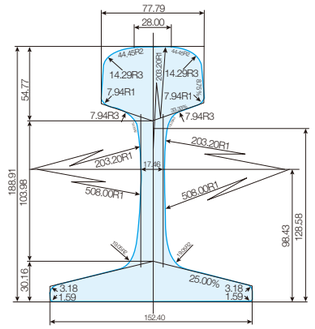

JIS (Japanese Industrial standards)

37kg Rail (37A)

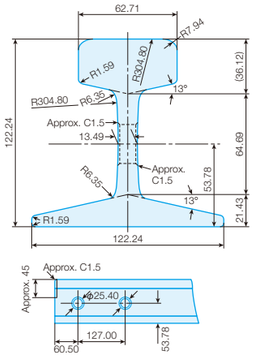

40kg N Rail (40N)

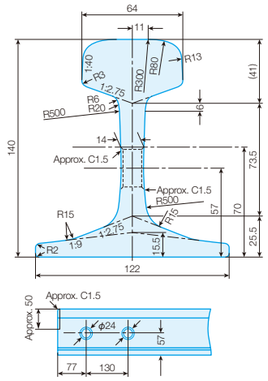

EN (European Norm)

54 E1 Rail

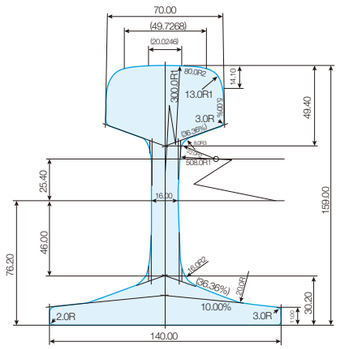

60 E1 Rail

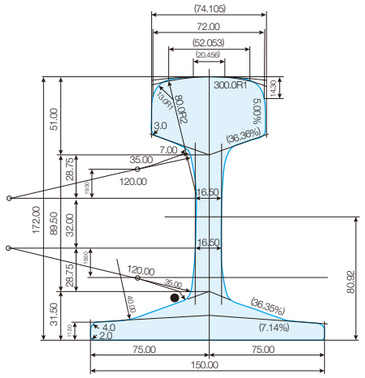

60 E2 Rail

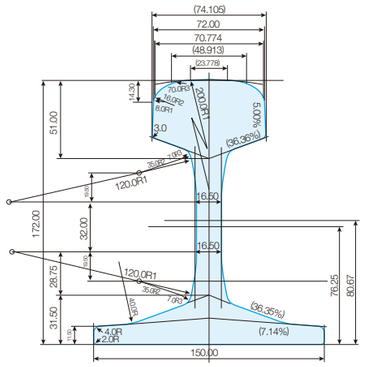

50kg N Rail (50N)

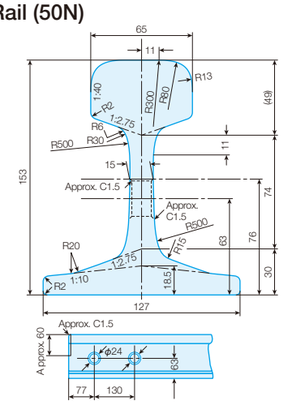

60kg Rail (60)

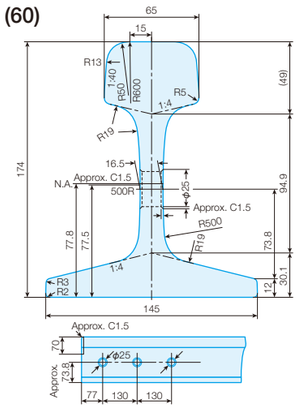

UIC (International Union of Railways)
IRS (Indian Railway Standard)

UIC60/IRS60 Rail

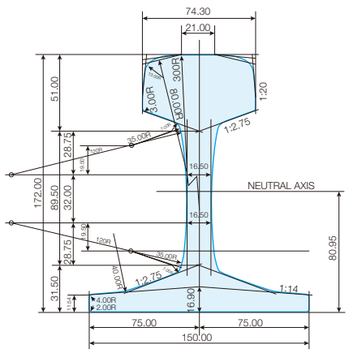

GOST

P65 Rail

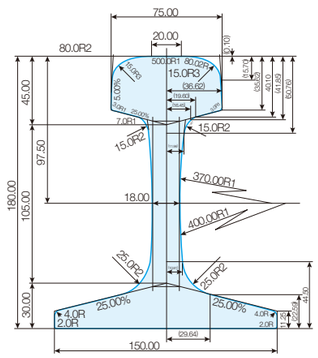

AS (Australian Standard)

AS68 Rail

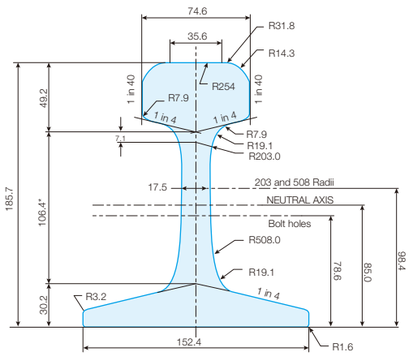

Head Hardened Rail
(DHH Rails)

DHH rail

Recently, railroad companies desires to improve their rail life.

Therefore, rails of various hardness and much deeper hardened layer are required depending on the conditions under which the tracks will be used.

NIPPON STEEL has developed DHH (Deep Head Hardened) rails in order to satisfy these demands.

Features of DHH rails

1) Good wear resistance

DHH rails enjoy long rail life coming from higher hardness produced by In-Line heat treatment process.

This leads to high economical performance by reducing maintenance cost and purchasing cost.

2) Deep and Uniformly hardened layer in rail head

DHH rails show a fine pearlitic structure over the whole rail head.

Consequently, DHH rails retain high hardness and strength deep into the rail head.

3) High weldability

DHH rails permit flash-butt welding under the same condition as plain carbon rails.

Also, the softened area of HAZ(Heat affected zone) is very narrow.

Kinds of DHH rails

We produce following grades of DHH rails

- JIS E 1120 : DHH340 DHH370
- EN 13674 : R350HT
- IRST12 : GR1080

Specifications

JIS E 1120 (for reference)

1 Chemical Composition(%)

Type	C	Si	Mn	P	S	Cr	V
DHH340	0.72—0.82	0.10 —0.55	0.70—1.10	0.030 and under	0.020 and under	0.20 and under	0.03 and under*
DHH370	0.72—0.82	0.10 —0.65	0.80 —1.20	0.030 and under	0.020 and under	0.25 and under	0.03 and under*

* : Vanadium are added if needed

2 Mechanical Properties

Type	Tensile Strength N/mm²(kgf/mm²)	Elongation (%)
DHH340	1,080 (110) and over	8 and over
DHH370	1,130 (115) and over	8 and over

(JIS No4 testpiece)

3 Hardness

Type	Surface hardness at head Brinell hardness (HBW)	Vickers hardness (HV)	
		A point; gauge corner	B point; center of the head
DHH340	321—375	311 and over	311 and over
DHH370	331—388	331 and over	331 and over

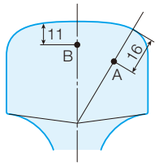

Quality

1 Chemical Composition(%) and Electric Resistance (for reference)

	Type	C	Si	Mn	P	S	Cr	electrical resistivity (μΩ•cm)
	DHH340	0.78	0.24	0.87	0.012	0.011	0.13	22.80
	DHH370	0.77	0.23	0.88	0.013	0.008	0.20	23.44
Reference	NHH	0.78	0.23	0.86	0.023	0.009	0.04	22.73
Reference	Standard rail	0.71	0.23	0.91	0.015	0.006	0.04	22.01

2 Tensile properties (for reference)

Type	Tensile Strength N/mm² (kgf/mm²)	Elongation (%)
DHH340	1,164 (118.7)	14
DHH370	1,291 (131.7)	13

(JIS No4 testpiece)

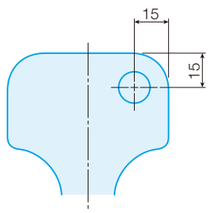

3 Brinell Hardness in rail section (for reference)

Compared with conventional heat treated rails. The DHH rail has more uniform hardness over the entire rail head section.

Hardness level	
Vickers (Hv)	Brinell (Hв)
415 up	(395 up)
400 up	(380 up)
385 up	(365 up)
370 up	(350 up)
355 up	(335 up)
340 up	(320 up)
325 up	(305 up)
310 up	(290 up)
295 up	(275 up)
280 up	(260 up)
265 up	(245 up)
250 up	(230 up)

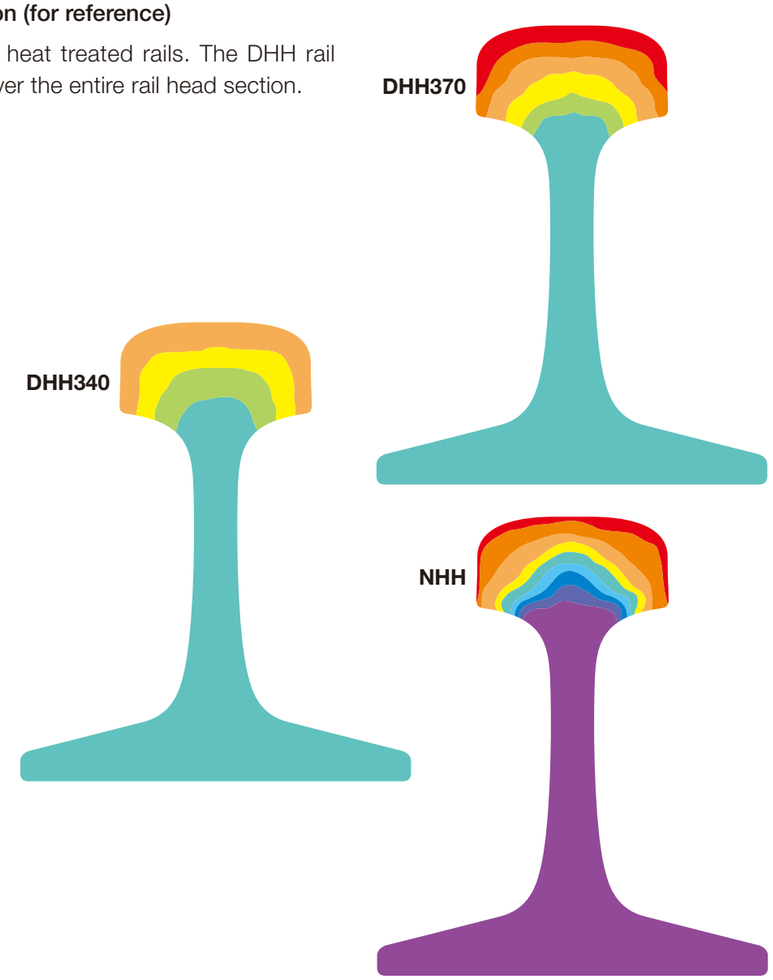

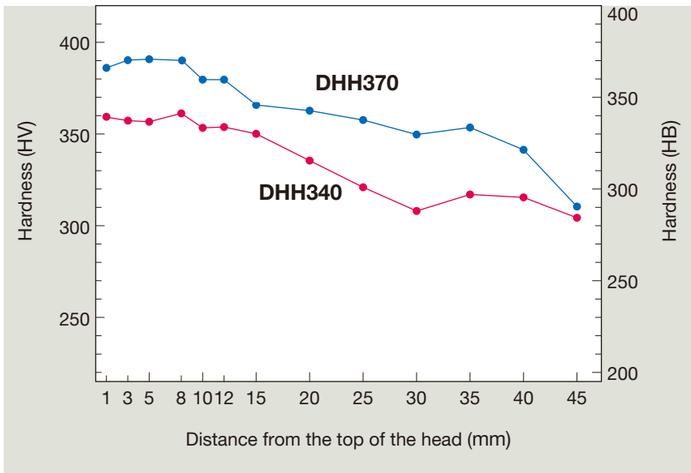

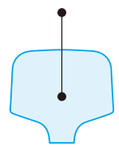

4 Macro and Micro structure of DHH rail (for reference)

Macro structure

DHH rail

conventional HH rail

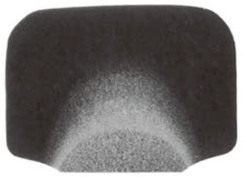

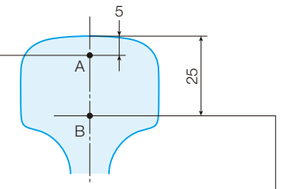

Micro structure
(×5,000)

DHH rail

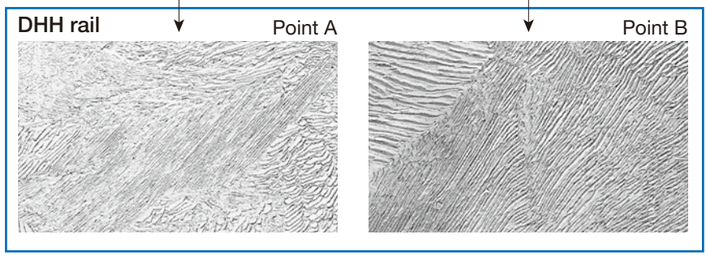

conventional HH rail

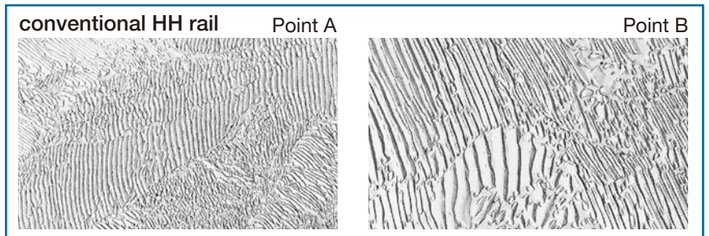

5 Residual Stress

The DHH rail shows stable residual stress distribution over the entire cross-section.

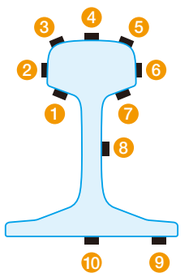

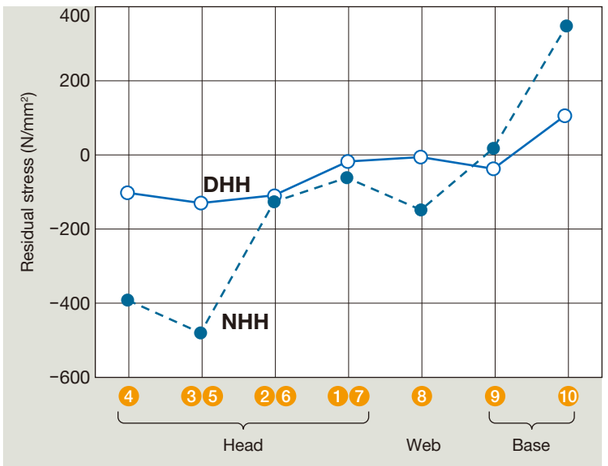

6 Macro structure of DHH rail (for reference)

（i）Flash-butt welding

DHH370 rail

Macro structure of vertical cross section

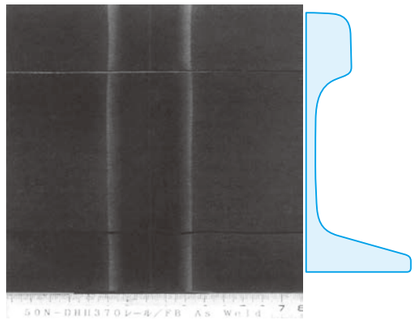

Hardness distribution of top rail head and vertical cross section

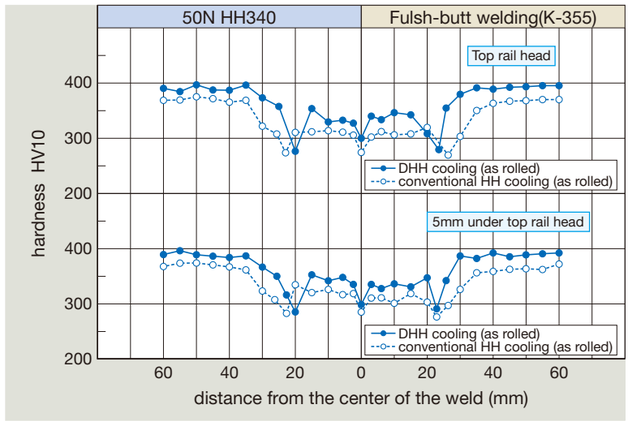

DHH340 rail

Macro structure of vertical cross section

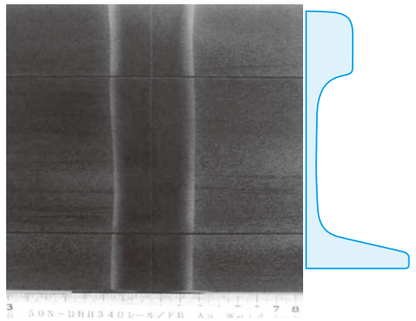

Hardness distribution of top rail head and vertical cross section

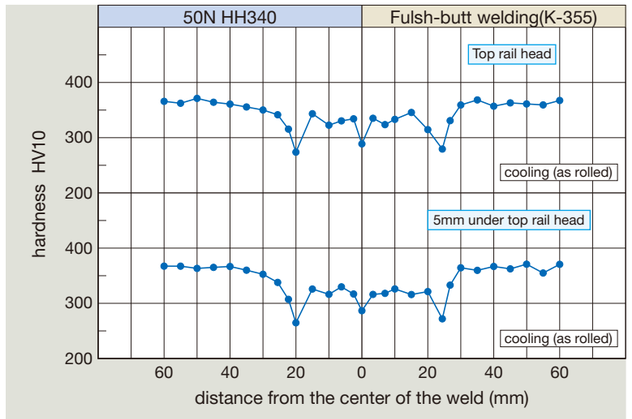

（ii）Thermite Welding

Thermite welding is also available for DHH340 & DHH370.

DHH370 rail

Macro structure of welded joint (JIS 50N rail)

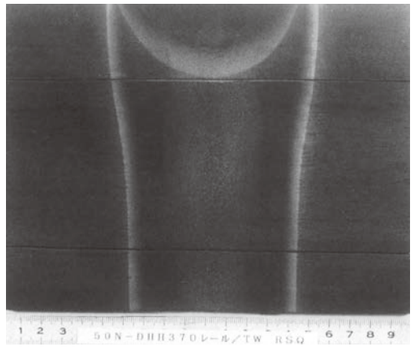

Hardness distribution of welded joint (DHH370/TW)

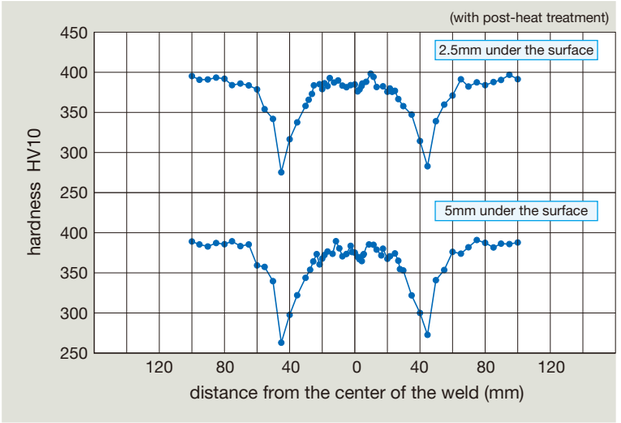

DHH340 rail

Macro structure of welded joint (JIS 50N rail)

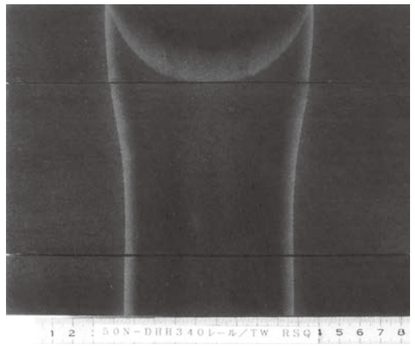

Hardness distribution of welded joint (DHH340/TW)

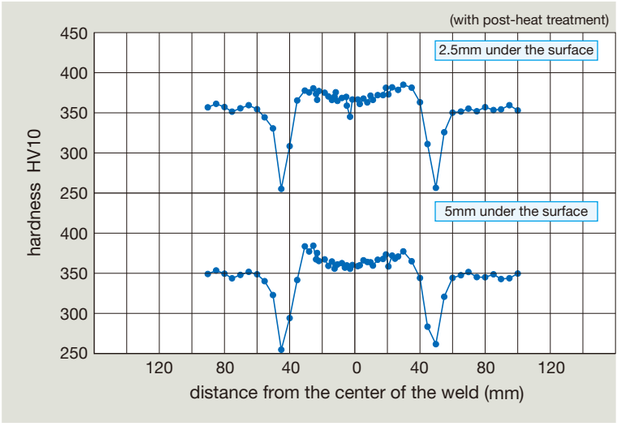

Rail for Heavy Haul

(HE Rail™)

Recently, operating environment of track material, especially rail, are getting harsher and harsher, due to the increasing axle load.

Under this circumstance, production for the higher wear resistance and higher economical performance rail are demanded.

Therefore, in order to respond to such demand, We NIPPON STEEL have developed HE rail™ which has higher wear resistance and higher anti-surface defect performance than conventional HH rails.

Comparison of DHH rail and HE rail™

Rail for Heavy haul		
	DHH rail	0.8% carbon
	HE rail	0.9% and higher carbon

Relation between hardness, wear and carbon content (Reference)

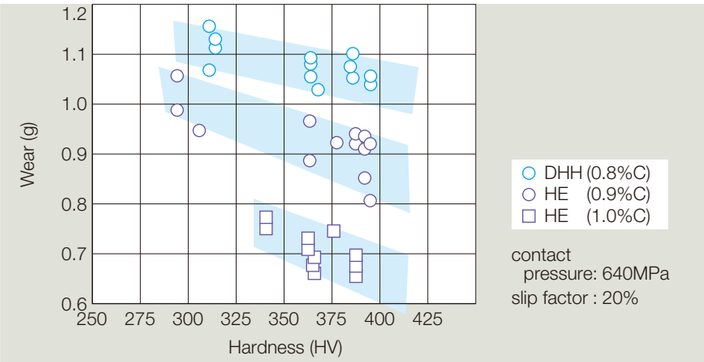

Quality

Characteristic of DHH rail and HE rail are shown below

1 Chemical composition (Reference)

Rails	Type	C	Si	Mn	Cr
DHH370	eutectoid	0.8	0.3	1.0	0.2
DHH370S		0.8	0.8	0.8	0.5
HE370	Hyper eutectoid	0.9	0.3	0.6	0.2
HE400		0.9	0.3	0.9	0.2
HE-X		1.0	0.5	0.7	0.2

2 Tencile test result (Reference)

Rails	Type	Yield Strength (MPa)	Tensile Strength (MPa)	Elongation (%)
DHH	eutectoid	830	1290	14
HE370	Hyper eutectoid	865	1353	12
HE400		910	1385	12
HE-X		951	1438	11

3 Hardness of rail cross section (Reference)

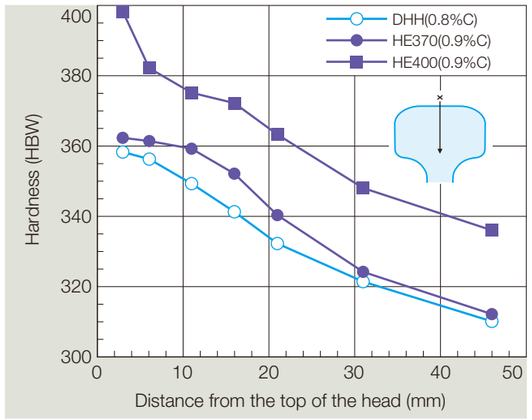

4 Micro structure (Reference)

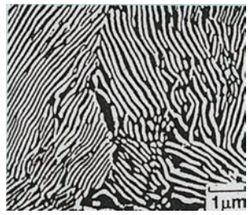

0.9%C (HE rail) (395HV)

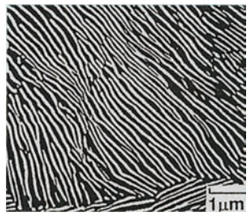

0.8%C (HH rail) (385HV)

5 Welding test result (Reference)

(i) Fulsh-butt welding
HE370 rail

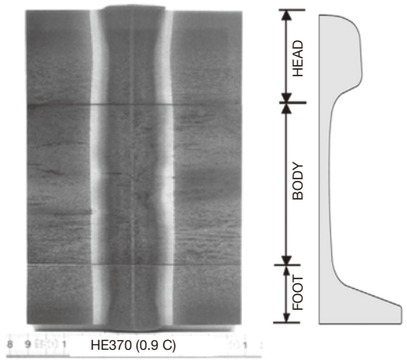

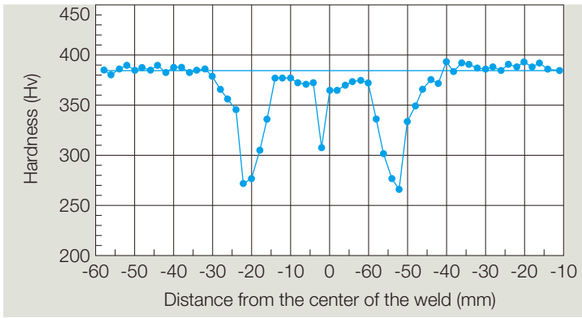

6 Rail life comparison test in the actual track (Reference)

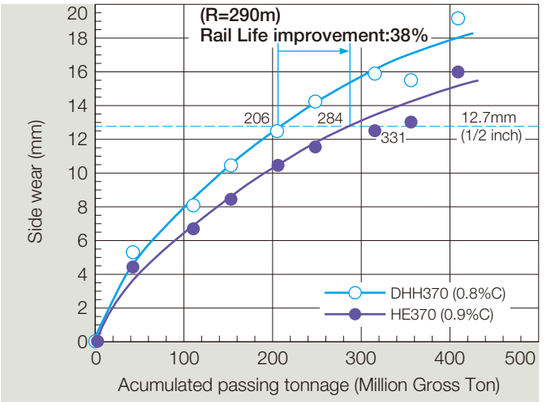

7 comparison of surface condition

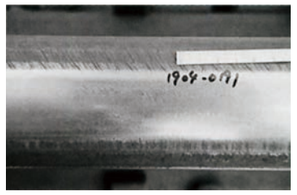

HE rail

DHH rail

Special Rails
(Tongue Rails/Crane Rails)

Tongue Rails

Specification

Type	Standard	Chemical composition (%)						Mechanical Properties		Remarks
		C	Si	Mn	P	S	Cu	Tensile Strength (N/mm²)	Elogation (%)	
80S 70S 50S	JIS (JIS E 1101)	0.63 — 0.75	0.15 — 0.30	0.70 — 1.10	0.030 and under	0.025 and under	—	800 and over	10 and over	Falling weight test required drop height 10m Falling weight test required drop height 6.1m

Type	Standard	Chemical composition (%)						Mechanical Properties		Remarks
		C	Si	Mn	P	S	Cr	Tensile Strength (N/mm²)	Elogation (%)	
EN60E1A1	EN (EN13674-2 R260)	0.62 — 0.80	0.15 — 0.58	0.70 — 1.10	0.025 and under	0.025 and under	—	880 and over	10 and over	
Zu1-60	IRS (IRS T-12 1080HH)	0.60 — 0.80	0.10 — 0.50	0.80 — 1.30	0.030 and under	0.030 and under	—	1080 and over	10 and over	Falling weight test required drop height 7.4m

Characteristic and Usage

Characteristic	Typical standard	USAGE
Most suitable for machining into various tougue rails	JIS	Points and crossings

Dimensions and Weights

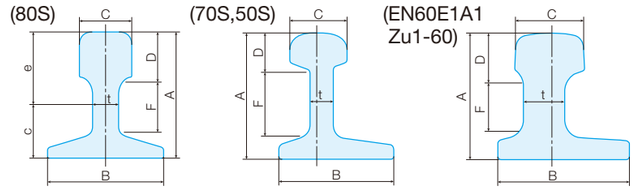

Type	Dimensions (mm)						Sectional Area (cm²)	Weight (kg/m)	Center of Gravity (cm)		Moment of Inertia I (cm⁴)	Radius of Gyration i (cm)	Section Modulus Z (cm³)
	A	B	C	D	F	t			c	e			
80S	159.0	145.0	65.8	(66.0)	58.875	40.0	(101.8)	79.9	(6.99)	(8.91)	(2,704)	(5.15)	(303.0)
70S	148.0	140.0	65.3	(52.0)	68.0	35.0	(88.5)	69.5	(6.22)	(8.58)	(2,120)	(4.89)	(254.0)
50S	135.0	127.0	64.0	(41.0)	69.0	25.0	(65.8)	51.7	(5.87)	(7.63)	(1,430)	(4.66)	(247.0)
EN60E1A1 ZU1-60	134.0	140.0	72.0*1)	(53.0)	—	44.0	(92.95)	(72.97)	(5.88)	(7.52)	(1,727)	(4.31)	(229.7)

For Center of Gravity, c is distance from bottom, e is distance from the top of the head
( ) denotes values not stipulated in specifications but calculated by NIPPON STEEL
*1) under 14.3mm from the top of rail head surface

Section

Point Rails

80S

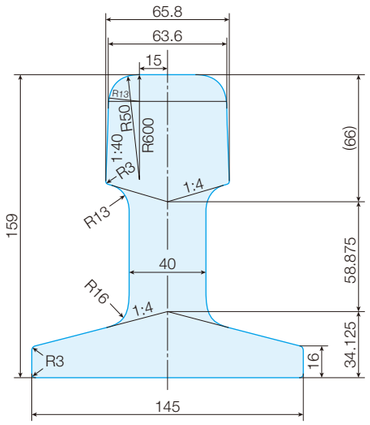

70S

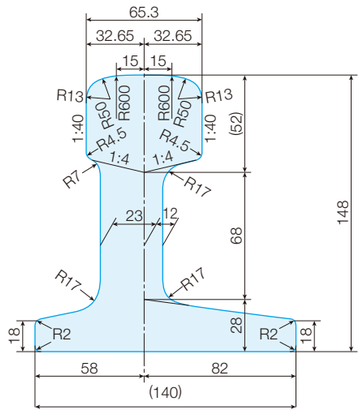

50S

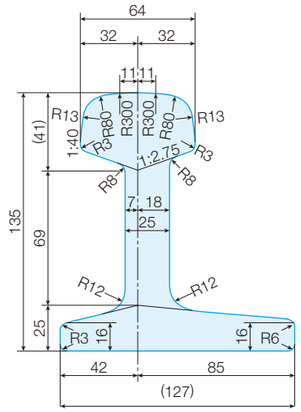

EN60E1A1/Zu1-60

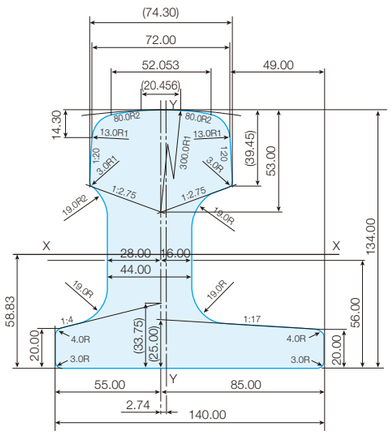

Crane Rails

Specification

Type	Standard	Chemical composition (%)						Mechanical Properties		Remarks
		C	Si	Mn	P	S	Cu	Tensile Strength (N/mm²)	Elogation (%)	
CR100K CR73K	NIPPON STEEL Standard	0.60 – 0.75	0.10 – 0.30	0.70 – 1.10	0.035 and under	0.040 and under	—	780 and over	8 and over	—

All tensile test uses JIS No4 test piece

Characteristic and Usage

Characteristic	Typical standard	USAGE
Can bear a huge load weight with its stable shape.	NIPPON STEEL Standard	Cranes

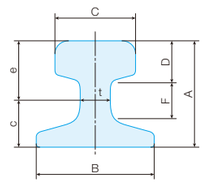

Dimensions and Weights

Type	Dimensions (mm)						Sectional Area (cm²)	Weight (kg/m)	Center of Gravity (cm)		Moment of Inertia I (cm⁴)	Radius of Gyration i (cm)	Section Modulus Z (cm³)
	A	B	C	D	F	t			c	e			
CR100K	150.0	155.0	120.0	53.0	65.5	39.0	(127.69)	100.2	(7.57)	(7.43)	(3,270)	(5.15)	(303.0)
CR73K	135.0	140.0	100.0	43.0	65.5	32.0	(93.39)	73.3	(6.69)	(6.81)	(2,000)	(4.89)	(254.0)

For Center of Gravity, c is distance from bottom, e is distance from the top of the head
( ) denotes values not stipulated in specifications but calculated by NIPPON STEEL

Section

CR 100K

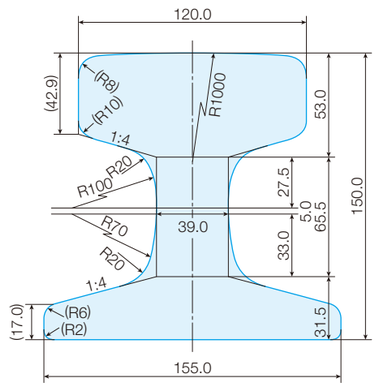

CR 73K

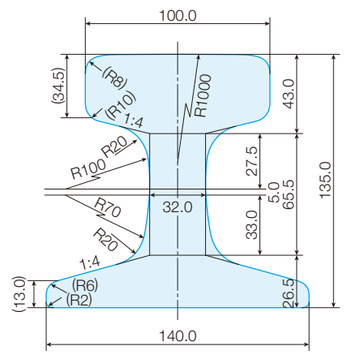

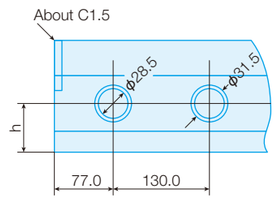

Rail	h
CR 100K	67.0
CR 73K	62.0

Marking

(JIS E 1101) *JIS Standard are shown for referance, please consult us anytime for original marking.

Standard Rail

Production record will be shown on the rails

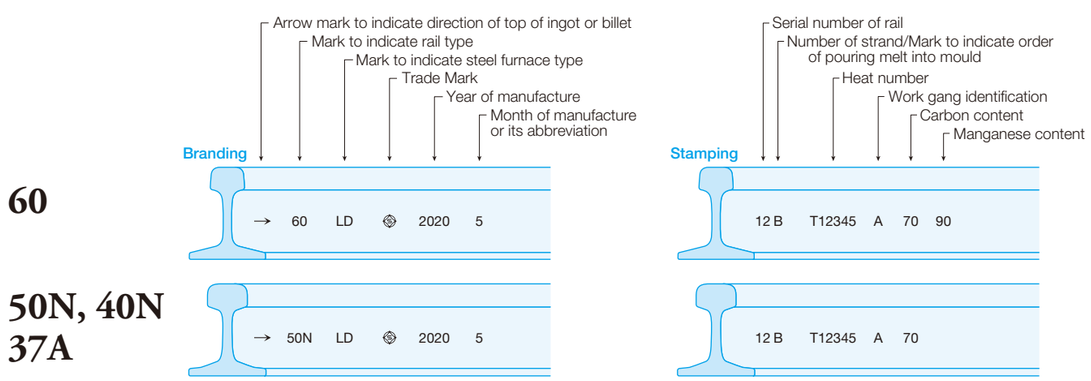

HH Rail

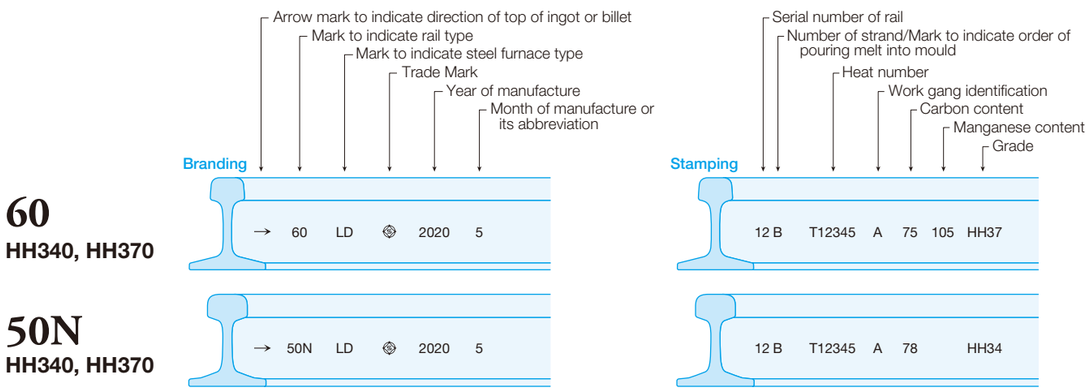

Tongue Rails

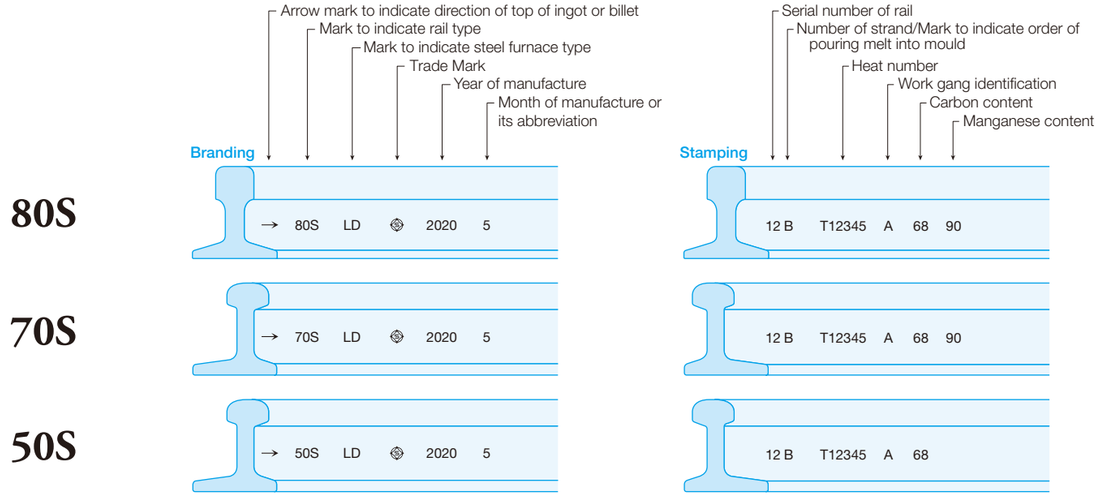

Crane Rails

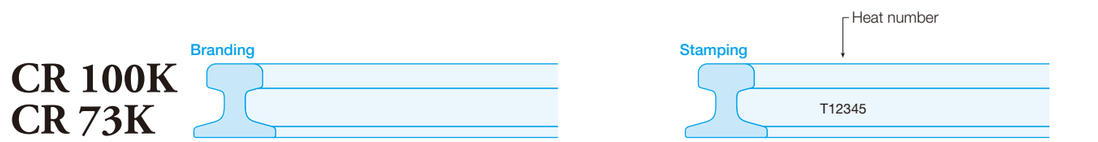

Research on Rails

At NIPPON STEEL, world-class research and development personnel provided with sophisticated laboratory facilities constantly make strenuous R & D efforts to offer better rails and new application technology, including new welding techniques. To meet the demand of faster high speed trains and heavier heavy haul railway.

Machines for rail performance testing.

- High speed rail tester (*)
- rail wear and damage producing tester (*)
- Heat treatment tester
- Type Nishihara wear tester
- rail damage simulater (*)
- Rail bend and fatigue tester
- Flash-butt welder
- Rail bend tester
- Falling weight tester

(*)NIPPON STEEL original machines

Rail damage simulator

High speed rail tester

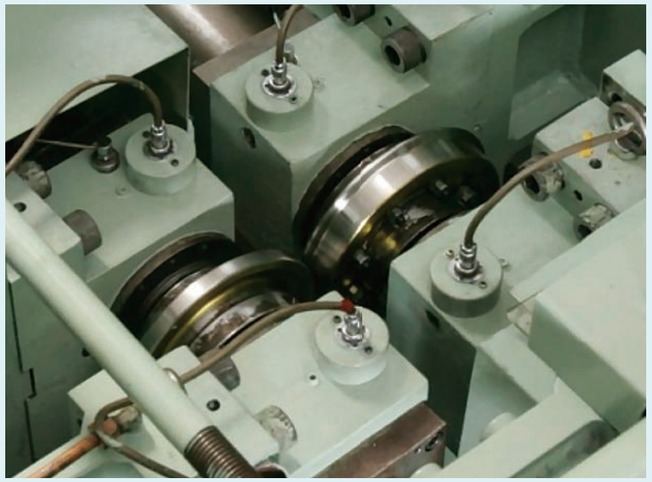

Rail wear and damage producing tester

Rail bend and fatigue tester

Flash-butt welder